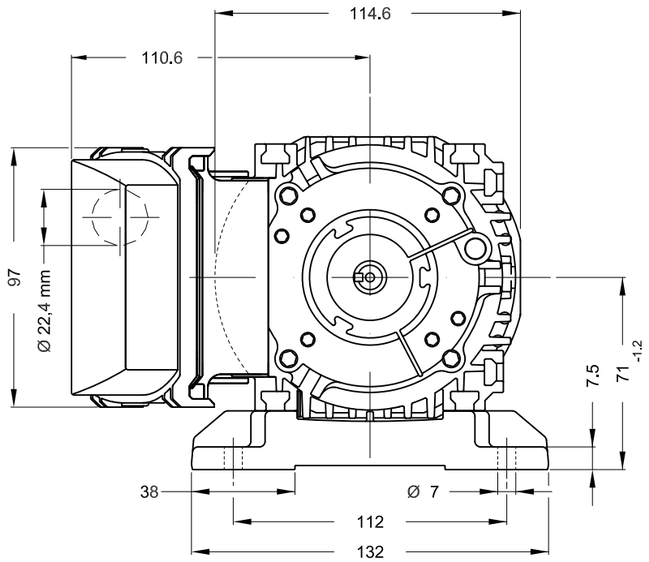

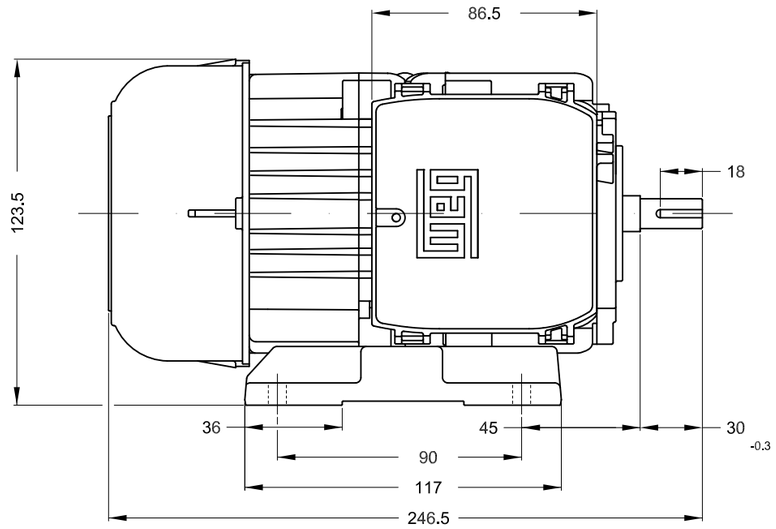

Cables outlet directed to NDE

Foot assembled to the frame with screw - designed for vertical operation with shaft end facing up

Without finish coating

Without coating

Mounting B3L(D)

DE Shaft End

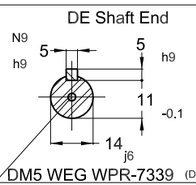

DM5 WEG WPR-7339 (DS DIN332)

0.55 kW (0.75 HP) 02 Poles 50 Hz | A

ECM	LOC	SUMMARY OF MODIFICATIONS	EXECUTED	CHECKED	RELEASED	DATE	VER

EXECUTED	PIRWBUSER	THREE PHASE W12 MOTOR ALUMINIUM FRAME W71 IP55 TEFC	1292756929	
CHECKED	AMANDAL		WDD	00
RELEASED	AMANDAL			
REL DT.	26.07.2022	WMO JARAGUA DO SUL Product Engineering	SHEET	1 / 1

Dimensions in mm

XME A3

CERTIFIED WEG MOTORES - Certified document. Not subject to changes.

WEG's property. Forbidden reproduction without previous authorization.

10009933123-00