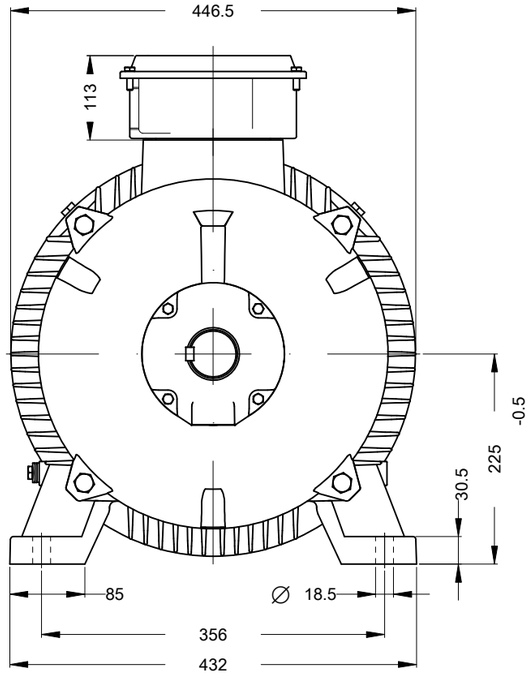

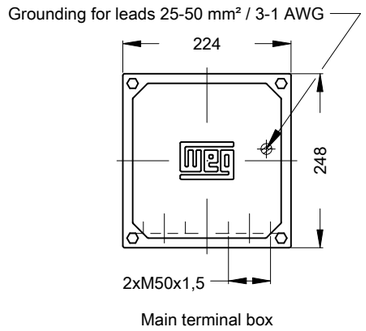

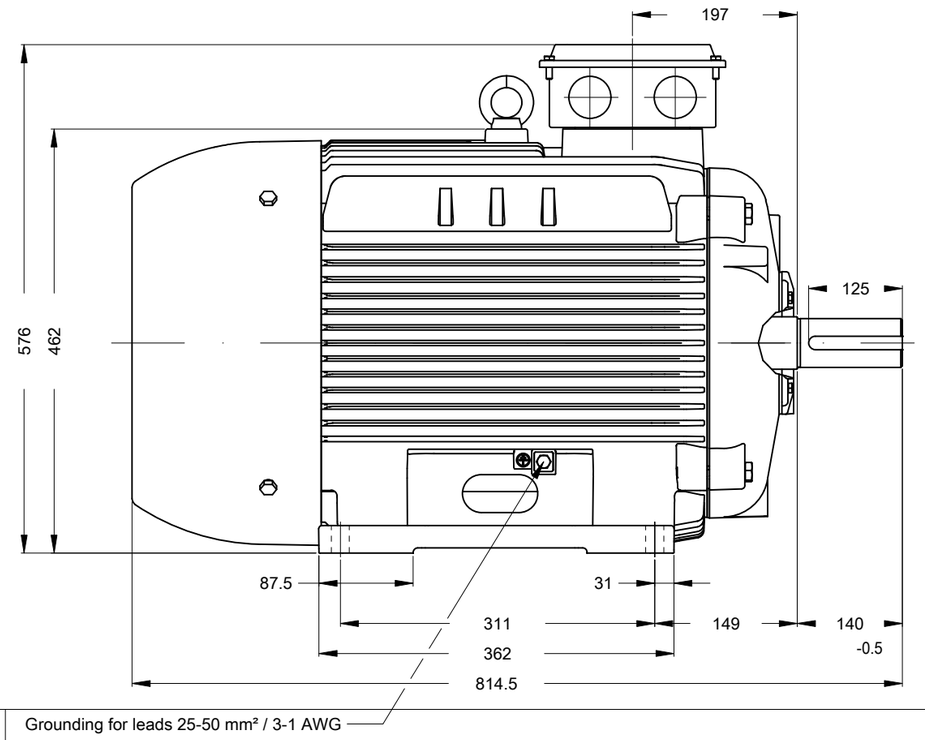

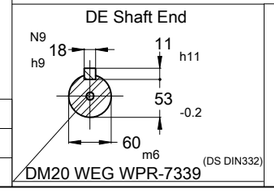

Color RAL 7000

Painting plan 201A

Mounting B3T

45 kW 04 Poles 50 Hz | A

ECM	LOC	SUMMARY OF MODIFICATIONS	EXECUTED	CHECKED	RELEASED	DATE	VER
			PIRWBUSER				00

EXECUTED	PIRWBUSER	THREE PH. MOTOR W20	PREVIEW
CHECKED		FRAME 225M IP55 TEFC	WDD 00
RELEASED			
REL. DATE		WEG NANTONG [Global Sales]	SHEET 1 / 1

Dimensions in mm

XME A3

WEG's property. Forbidden reproduction without previous authorization.