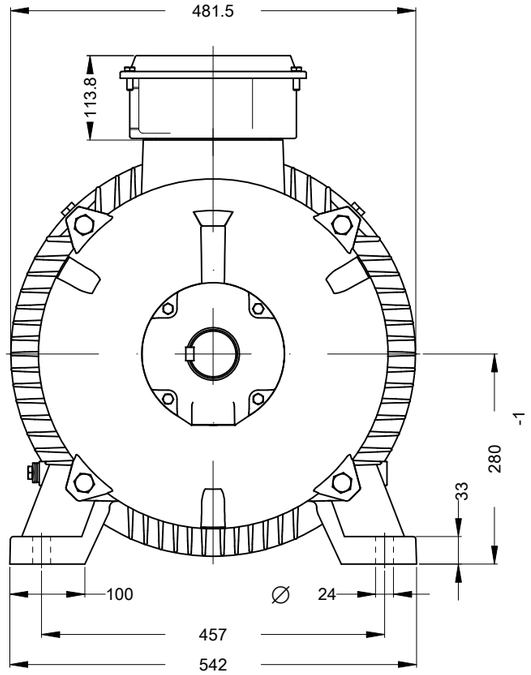

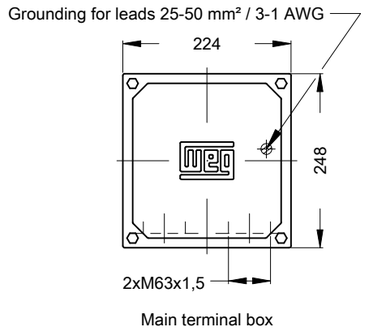

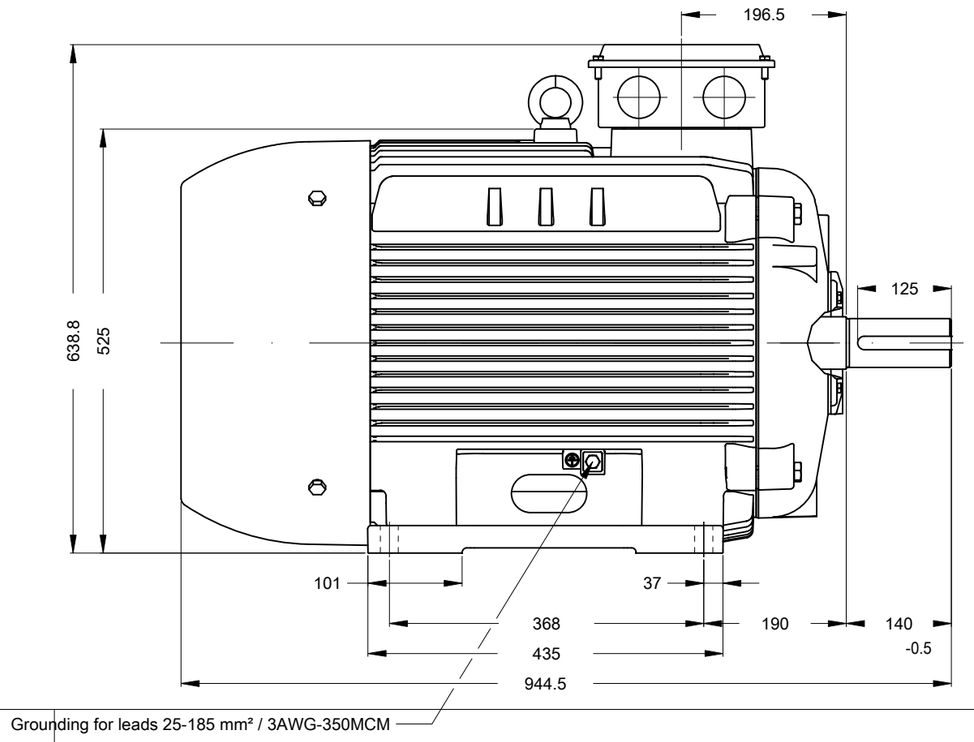

75 kW 04 Poles 50 Hz | A

DE Shaft End

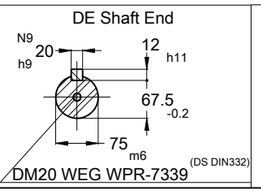

DM20 WEG WPR-7339

Color RAL 7000

Painting plan 201A

Mounting B3T

ECM	LOC	SUMMARY OF MODIFICATIONS	EXECUTED	CHECKED	RELEASED	DATE	VER
			PIRWBUSER				00

EXECUTED	PIRWBUSER	THREE PH. MOTOR W20	PREVIEW
CHECKED		FRAME W280S IP55 TEFC	WDD 00
RELEASED			
REL. DATE		WEG NANTONG [Global Sales]	SHEET 1 / 1

Dimensions in mm

XME A3

WEG's property. Forbidden reproduction without previous authorization.