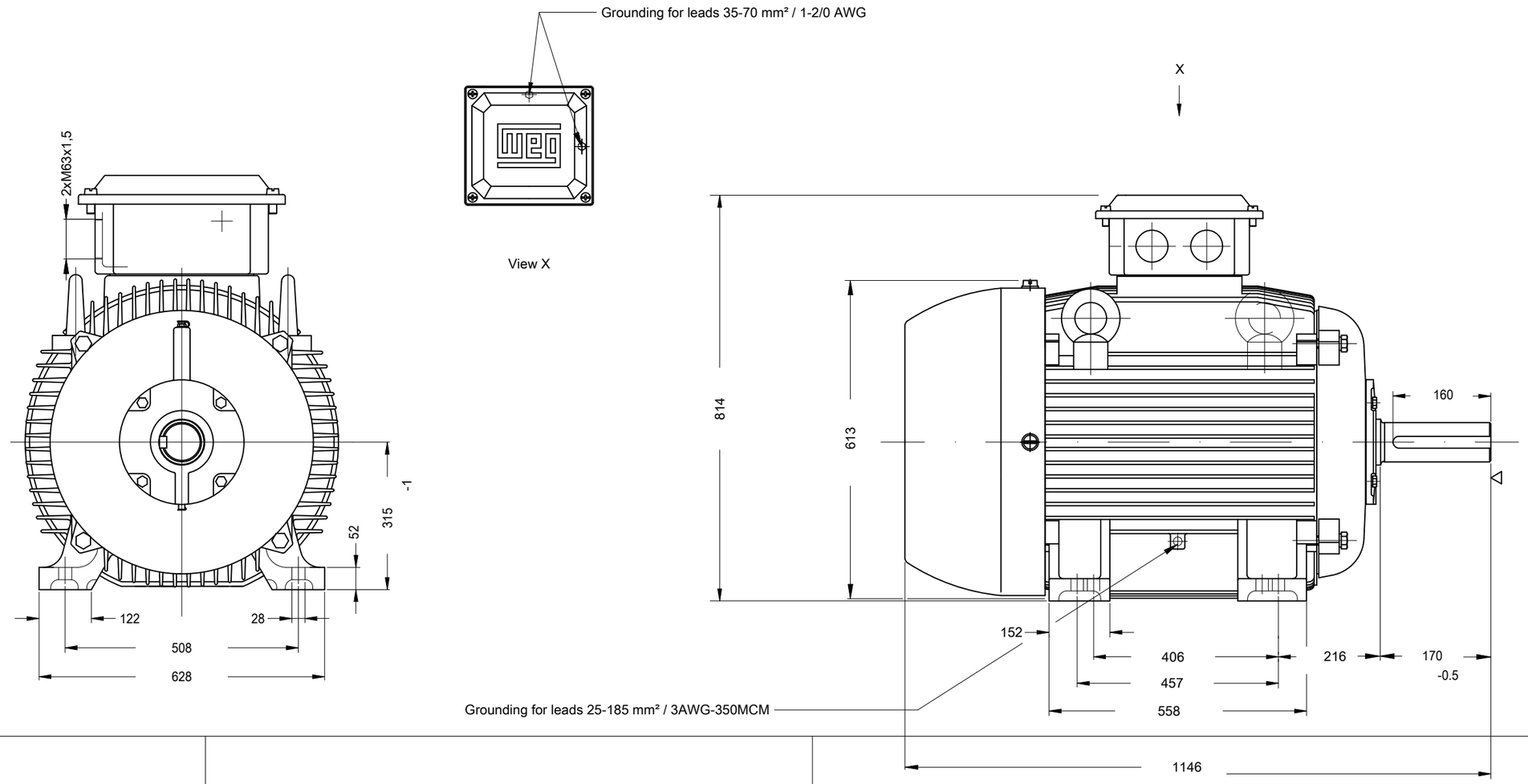

Dimensions in mm

110 kW 04 Poles 50 Hz | A

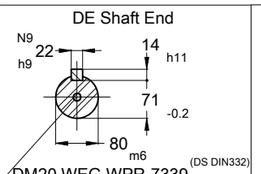

ECM	LOC	SUMMARY OF MODIFICATIONS	EXECUTED	CHECKED	RELEASED	DATE	VER
			PIRWBUSER				00

EXECUTED	PIRWBUSER	THREE PH. MOTOR W20	PREVIEW
CHECKED		FRAME 315S/M IP55 TEFC	WDD 00
RELEASED			
REL. DATE		WEG NANTONG [Global Sales]	SHEET 1 / 1

Color RAL 7000

Painting plan 201A

Mounting B3T

XME A3

WEG's property. Forbidden reproduction without previous authorization.