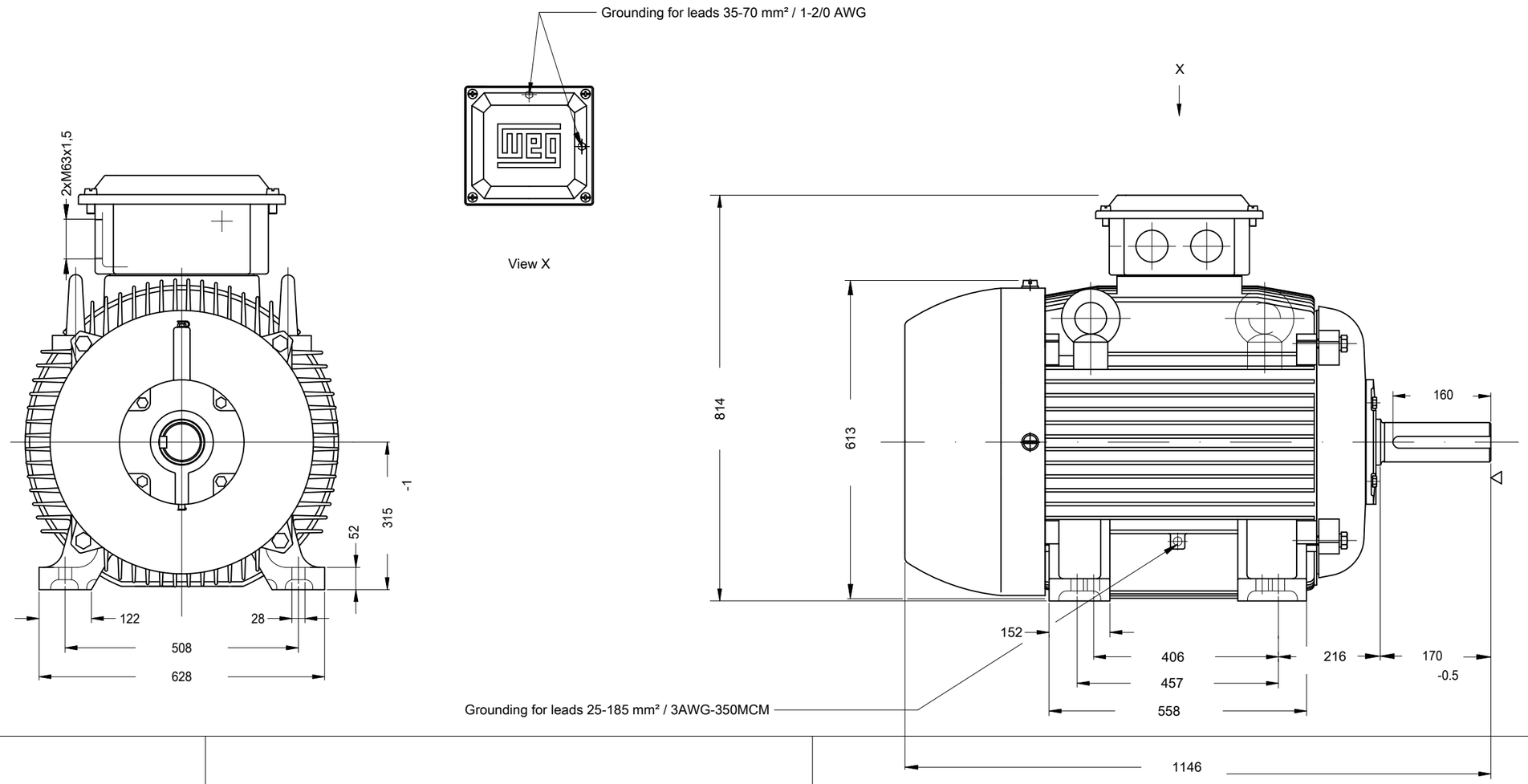


Dimensions in mm

150 kW 04 Poles 50 Hz | A

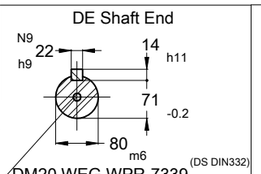


Color RAL 7000

Painting plan 201A

Mounting B3T

| ECM | LOC | SUMMARY OF MODIFICATIONS | EXECUTED | CHECKED | RELEASED | DATE | VER |
|---|---|---|---|---|---|---|---|
| | | | PIRWBUSER | | | | 00 |

| | | | |
|---|---|---|---|
| EXECUTED | PIRWBUSER | THREE PH. MOTOR W20 | PREVIEW |
| CHECKED | | FRAME 315S/M IP55 TEFC | WDD 00 |
| RELEASED | | | |
| REL. DATE | | WEG NANTONG [Global Sales] | SHEET 1 / 1 |

XME A3

WEG's property. Forbidden reproduction without previous authorization.