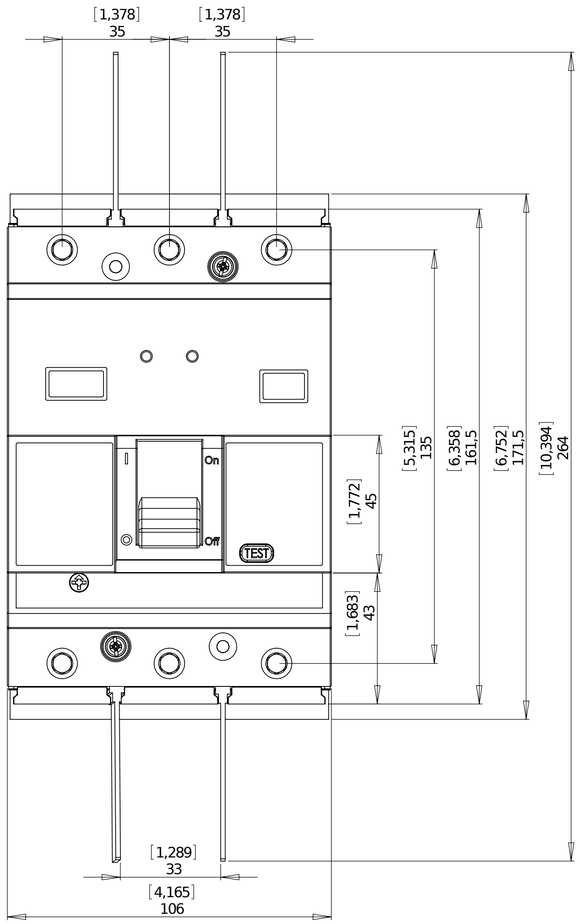
[1,378]
35
[1,378]
35
On
Off
TEST
[5,315]
135
[6,358]
161,5
[6,752]
171,5
[10,394]
264
[1,772]
45
[1,683]
43
[1,289]
33
[4,165]
106

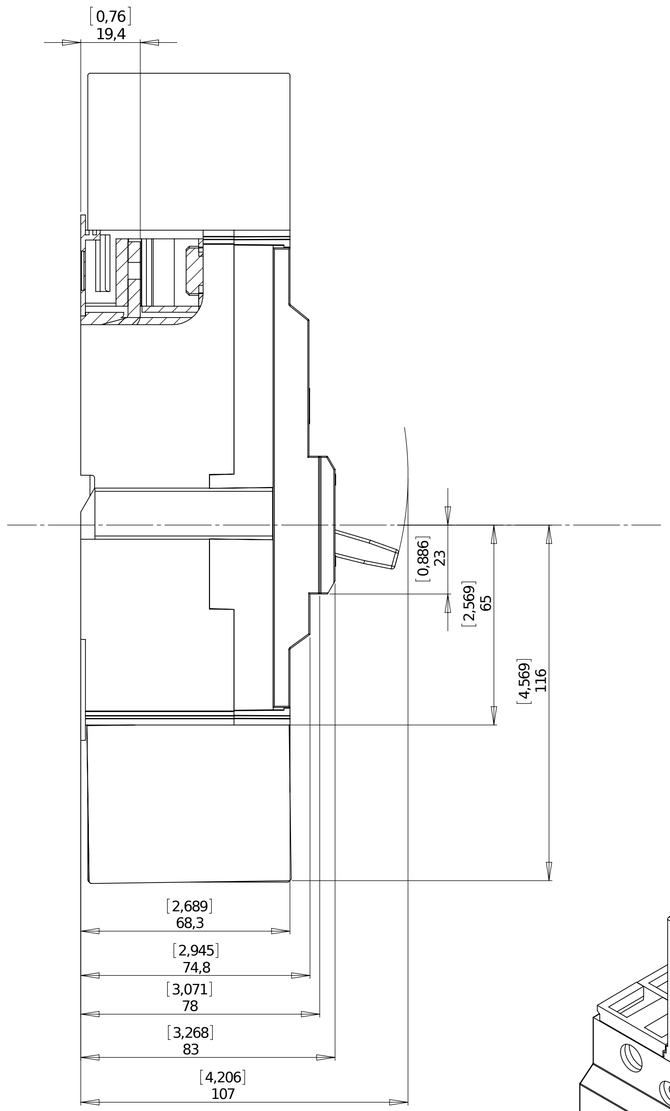
[0,76]
19,4
[0,886]
23
[2,569]
65
[4,569]
116
[2,689]
68,3
[2,945]
74,8
[3,071]
78
[3,268]
83
[4,206]
107

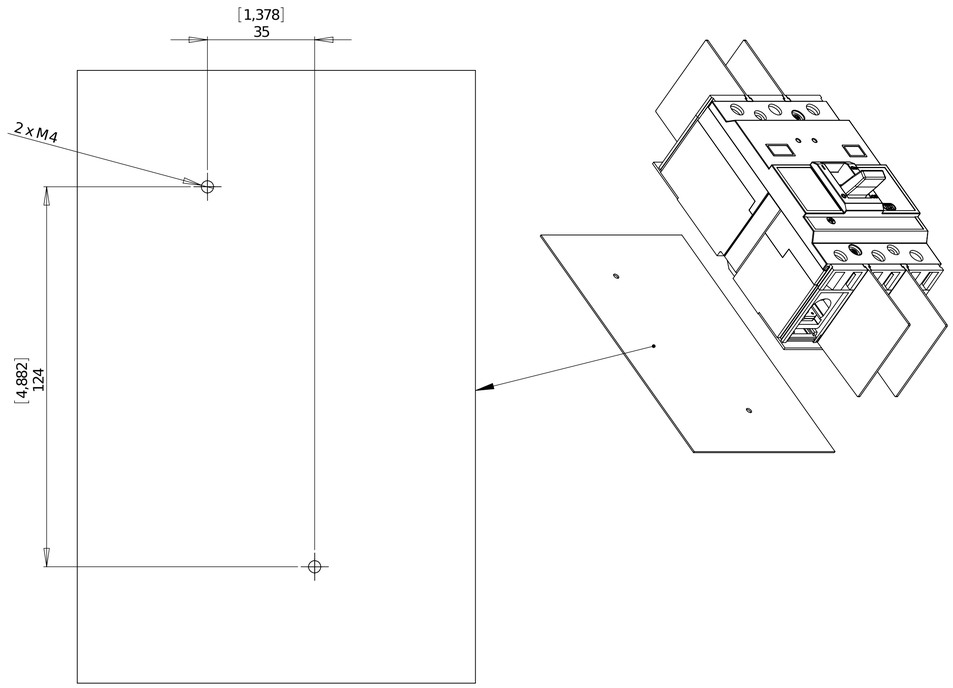
[1,378]
35
2 x M4
[4,882]
124

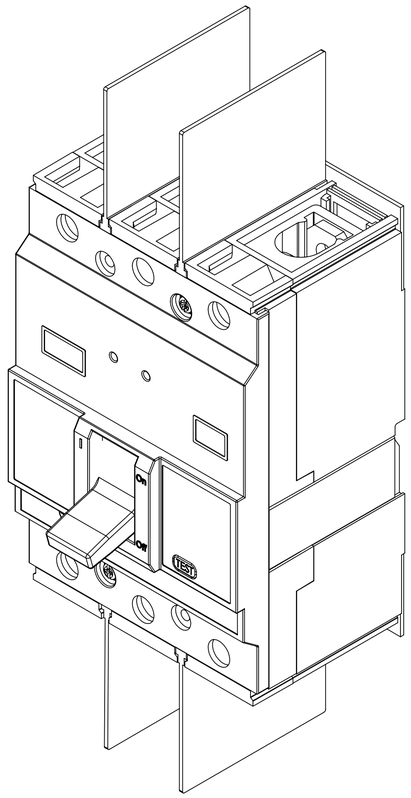
On
Off
TEST