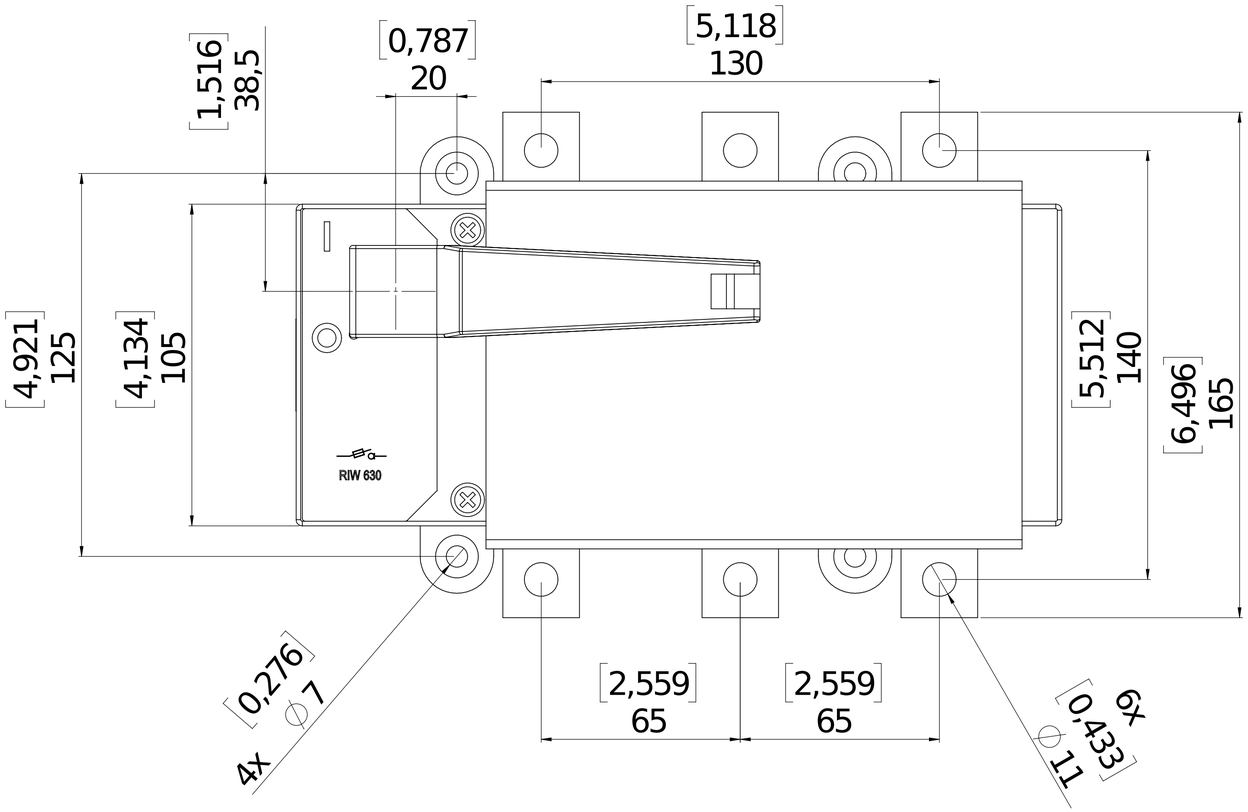
[1,516]
38,5
[0,787]
20
[5,118]
130
[4,921]
125
[4,134]
105
[5,512]
140
[6,496]
165
RIW 630
[0,276]
⌀7
4x
[2,559]
65
[2,559]
65
6x
[0,433]
⌀11

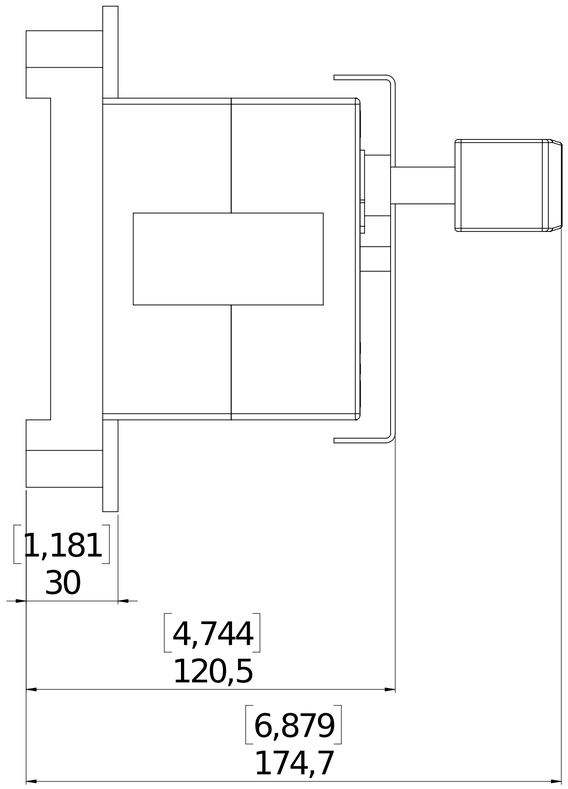
[1,181]
30
[4,744]
120,5
[6,879]
174,7

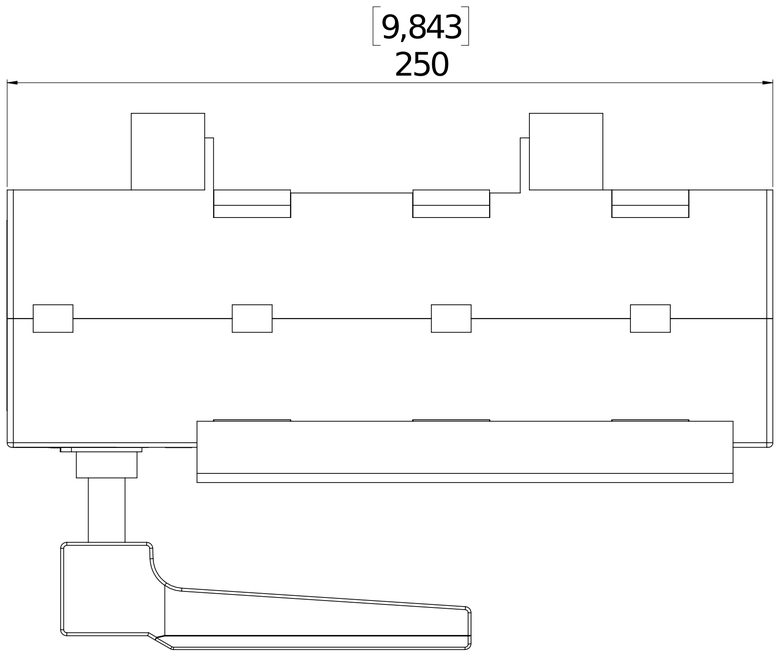
[9,843]
250

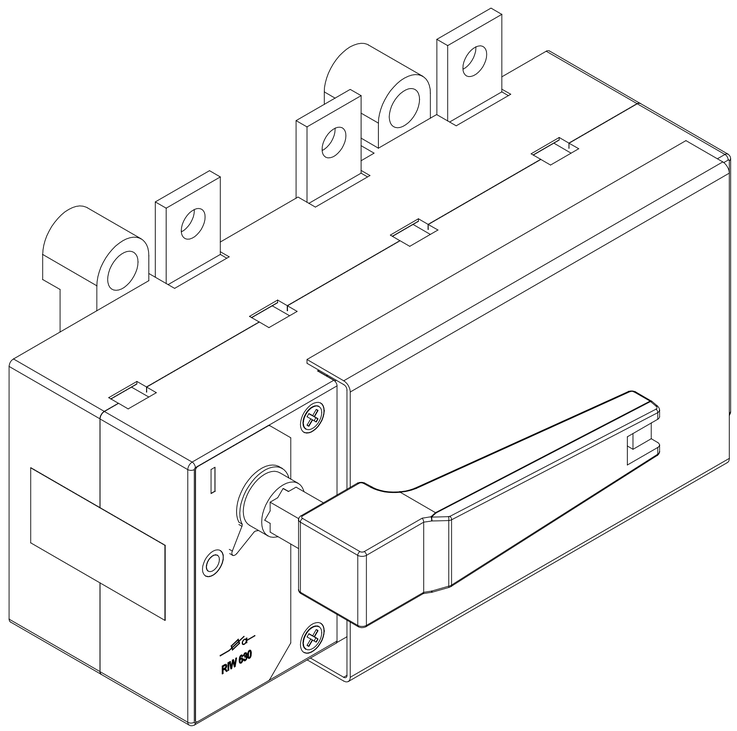
RIW 630