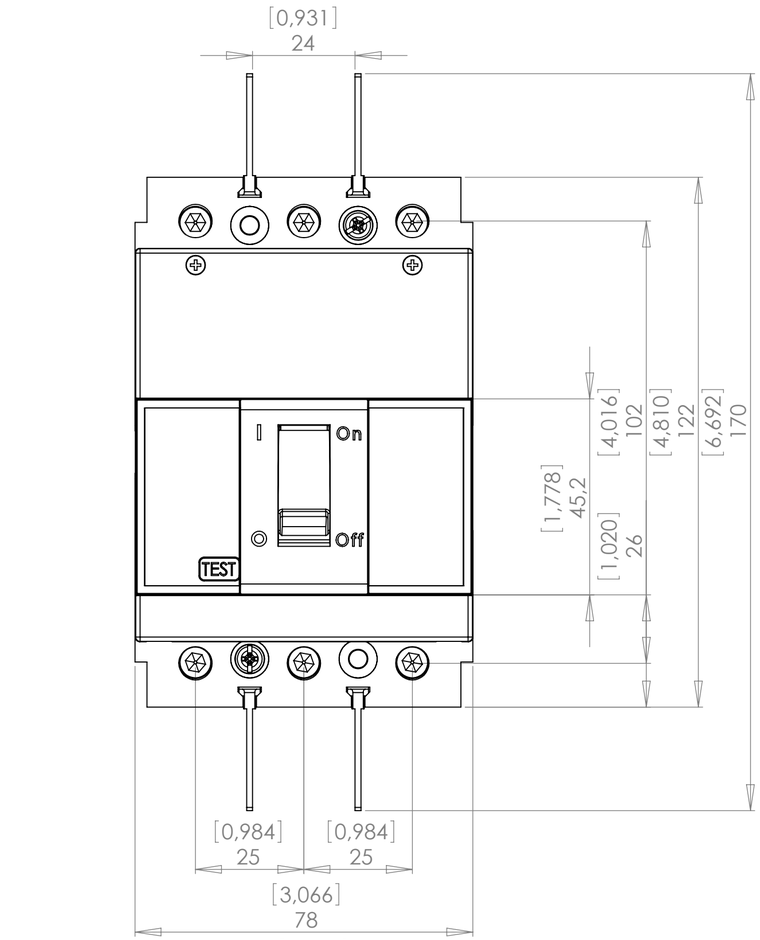
[0,931]
24
[4,016]
102
[4,810]
122
[6,692]
170
[1,778]
45,2
[1,020]
26
I
On
Off
TEST
[0,984]
25
[0,984]
25
[3,066]
78

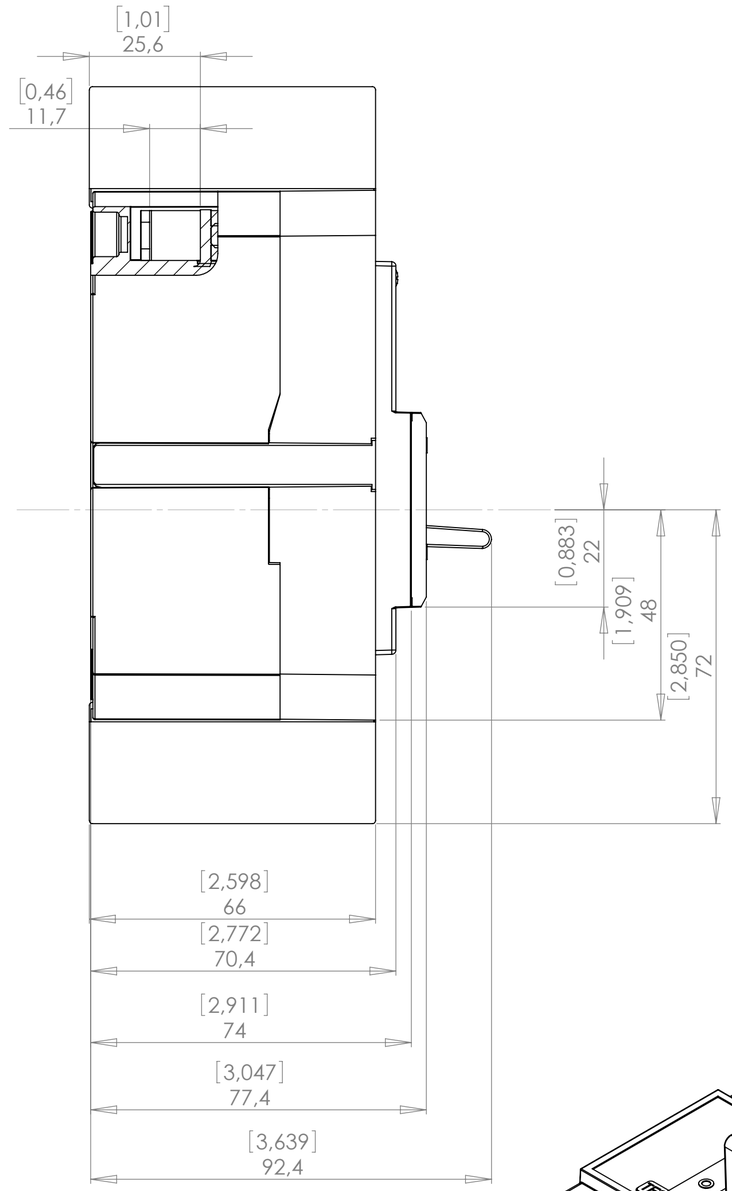
[1,01]
25,6
[0,46]
11,7
[0,883]
22
[1,909]
48
[2,850]
72
[2,598]
66
[2,772]
70,4
[2,911]
74
[3,047]
77,4
[3,639]
92,4

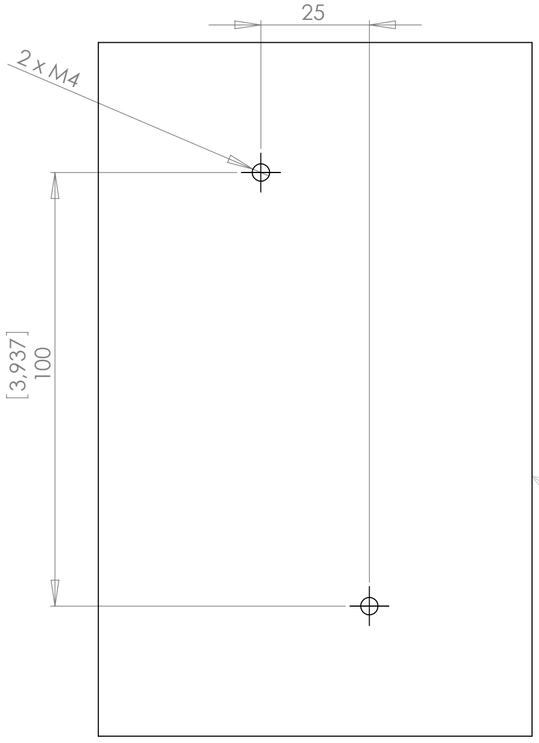
[0,984]
25
2 x M4
[3,937]
100

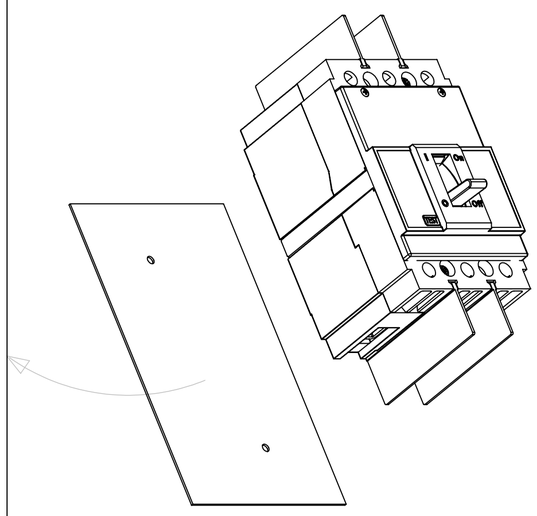

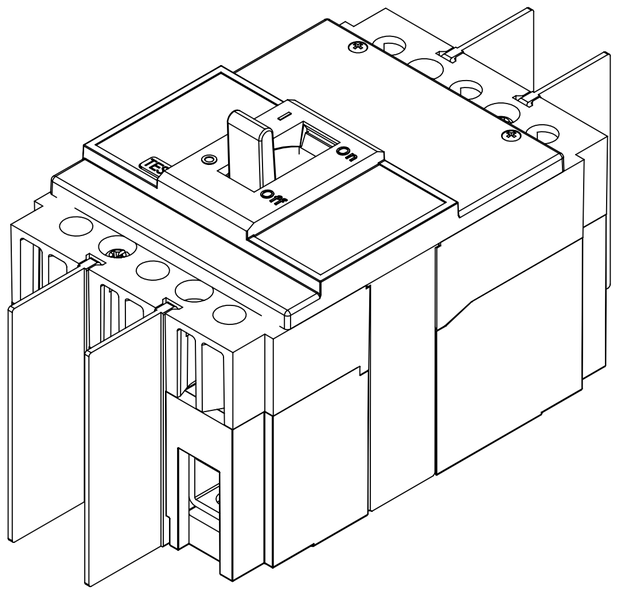
I
On
Off
TEST